Design Artefacts

Project Name: In-House Conference Management

Group-L

Team Members:

Devesh Kumar : 230001024 Kommireddy Jayanthi : 230001041

Kota Sanjay : 230001042 Nandini Kumari : 230001056

Pavithra Nelluri : 230001057

1. Use-Case Diagram:

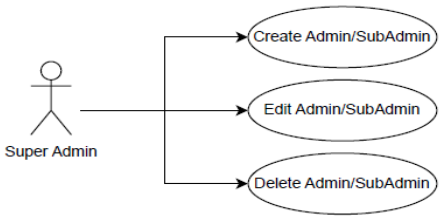

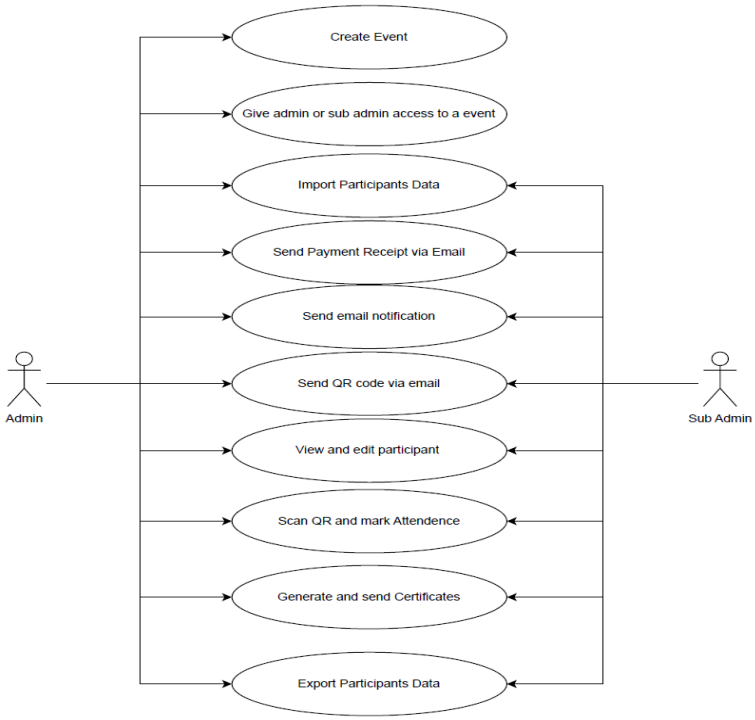

2. Sequence Diagrams:

(i) Create Admin/Sub-Admin:

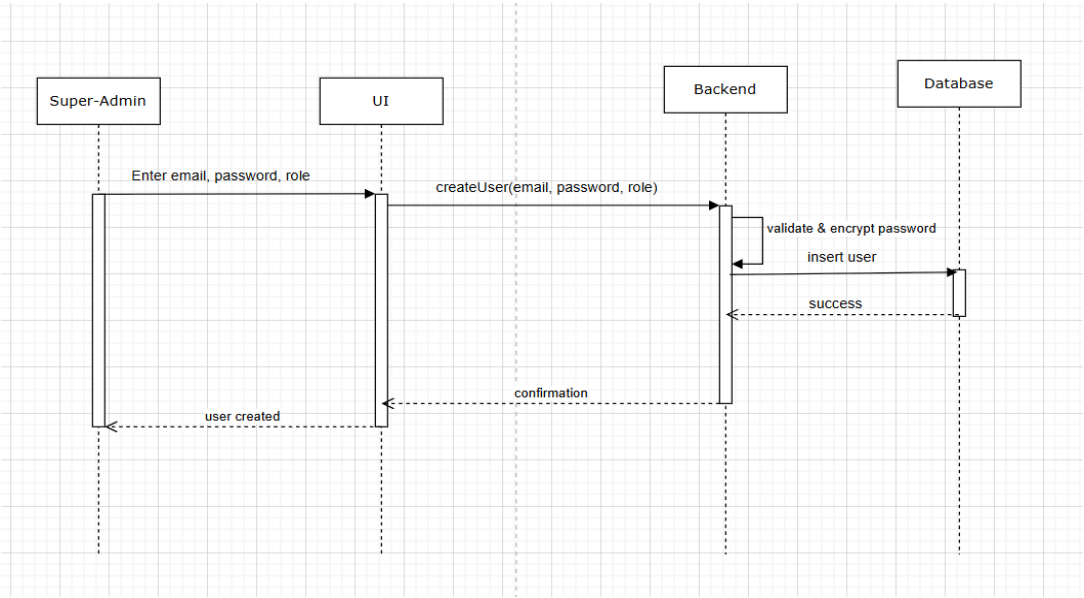

(ii) Edit Admin/Sub-Admin

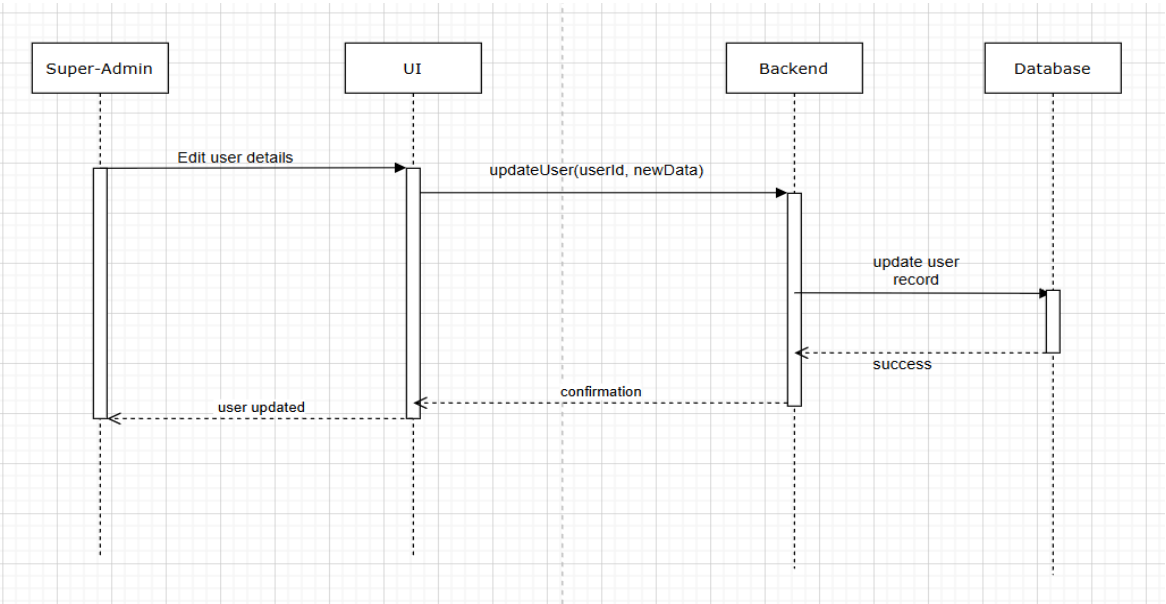

(iii) Delete of Create Admin/Sub-Admin

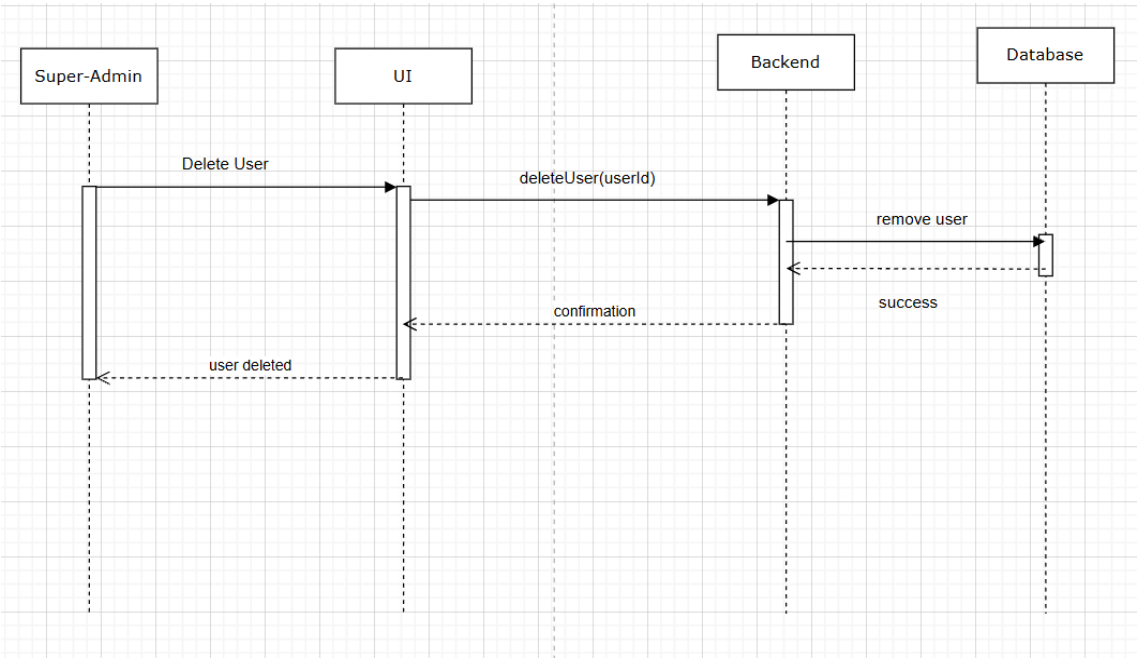

(iv) Create Event(Admin Only)

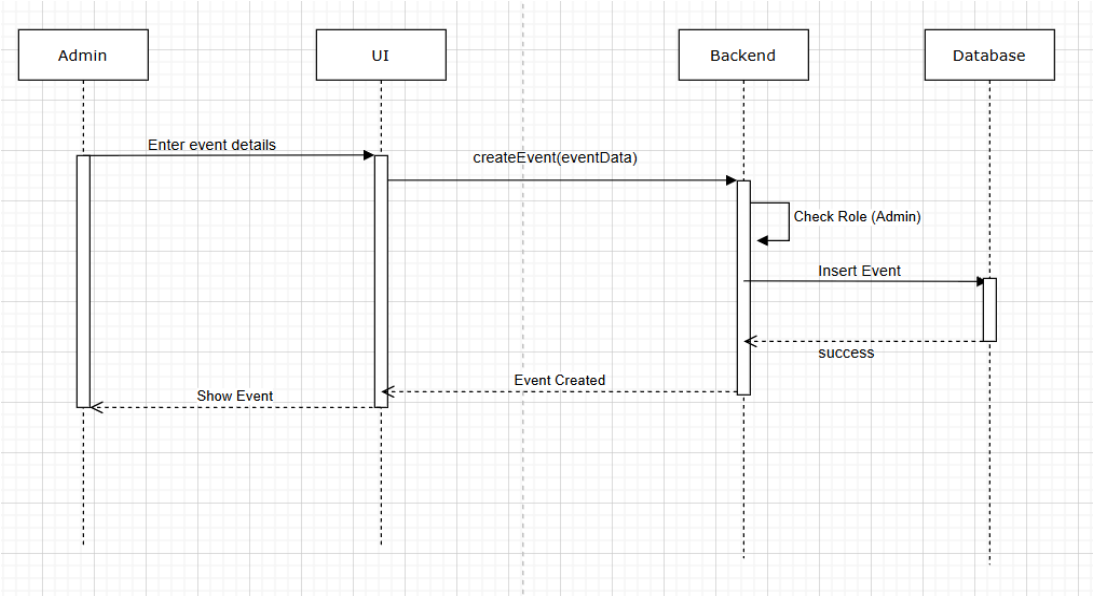

(v) Assign Admin / Sub-Admin to an Event (Admin)

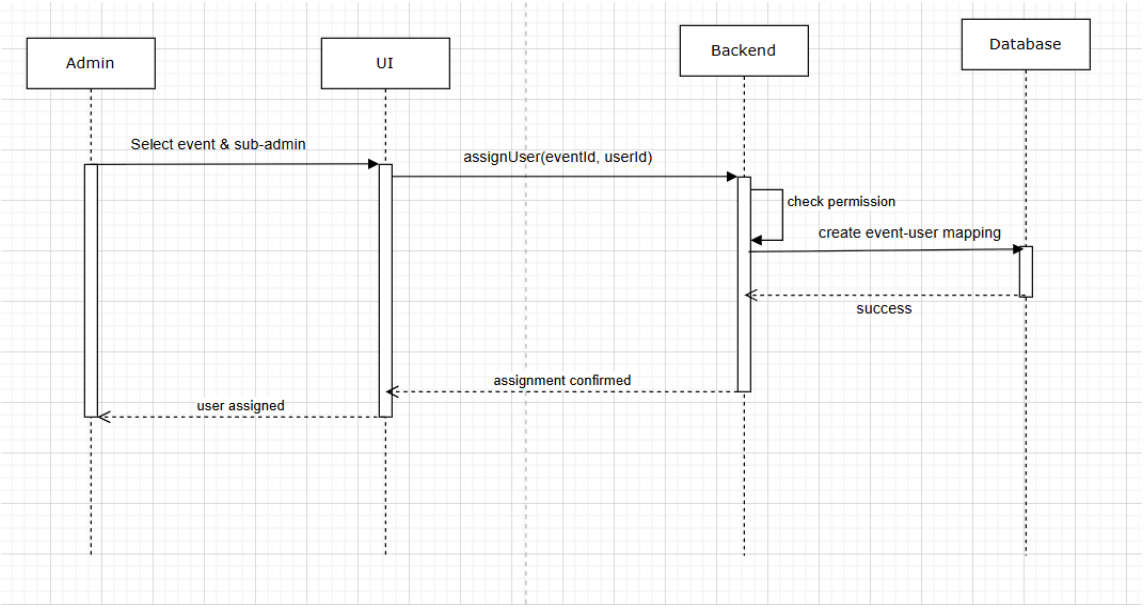

(vi) Import Participants Data (Admin / Sub-Admin)

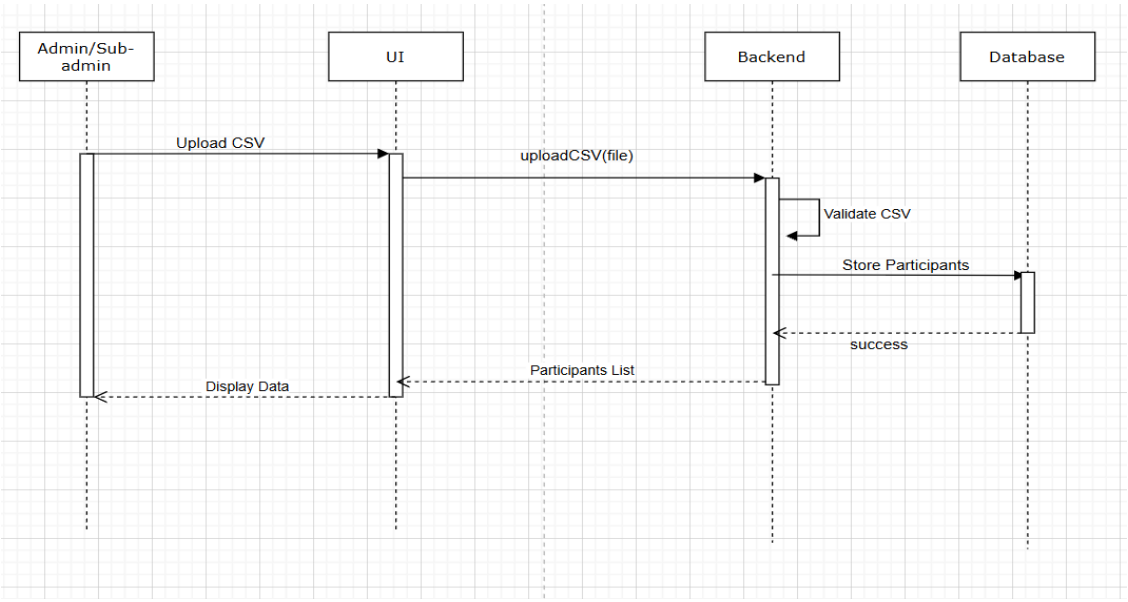

(vii) Send Payment Receipt Email (Admin / Sub-Admin)

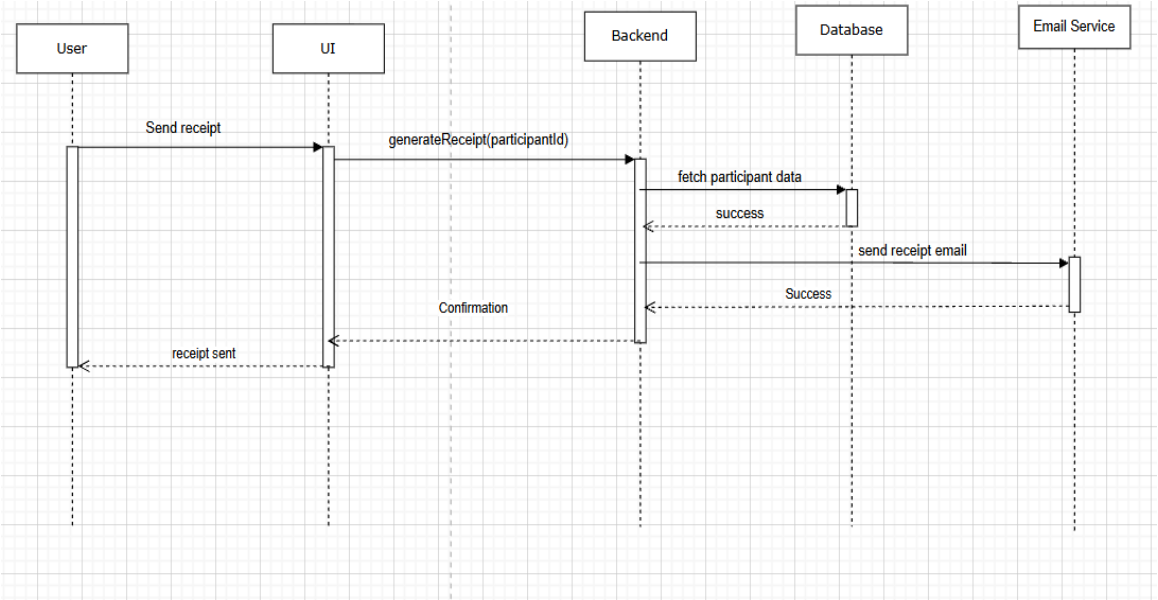

(viii) Send Notification Email

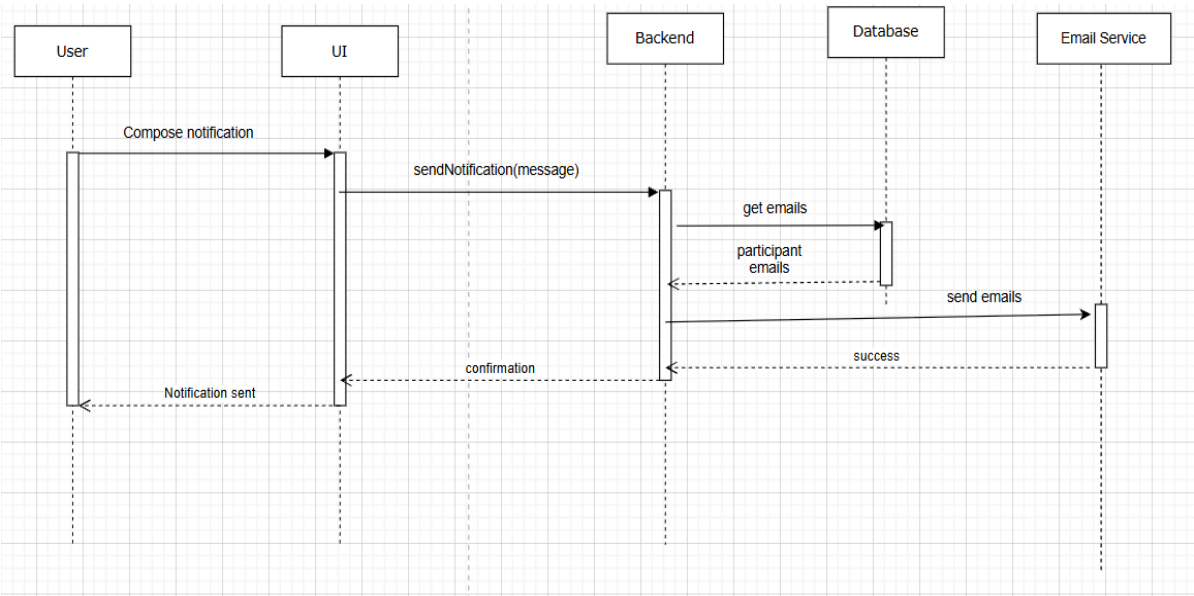

(ix) View and Edit Participants

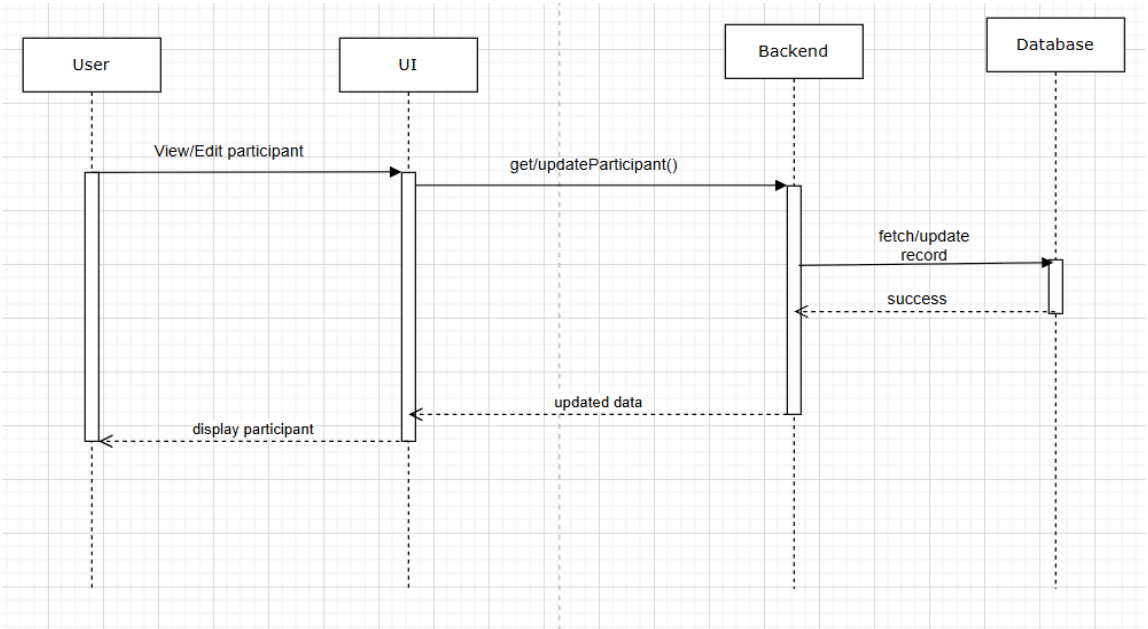

(x) Scan QR & Mark Attendance (Admin / Sub-Admin)

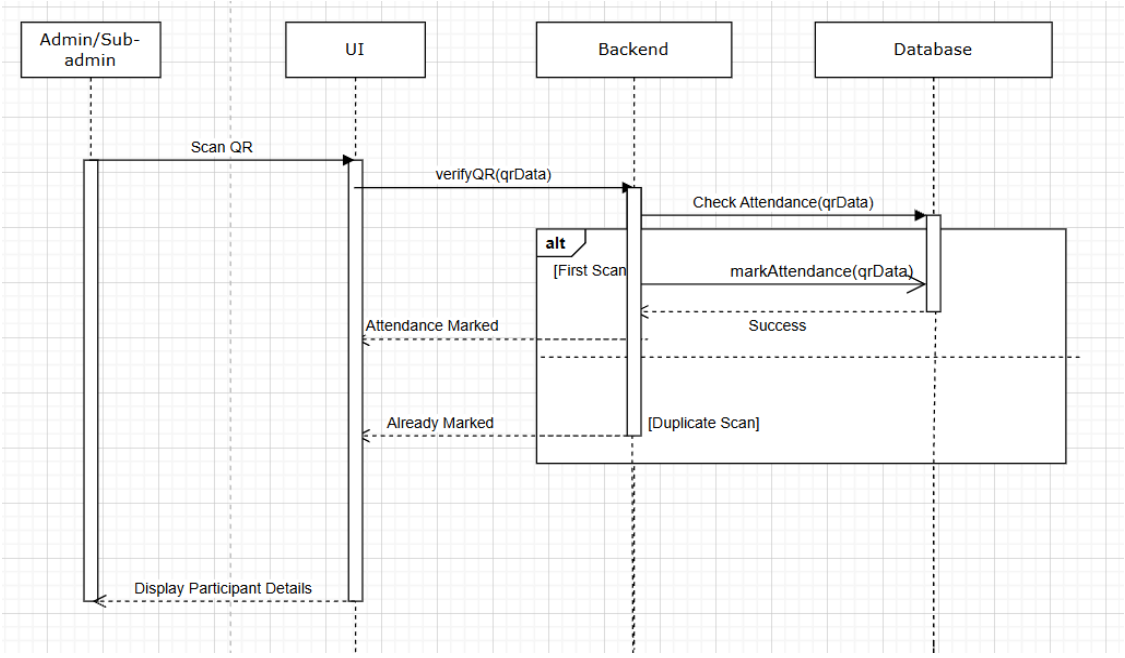

(xi) Generate & Send Certificates (Admin / Sub-Admin)

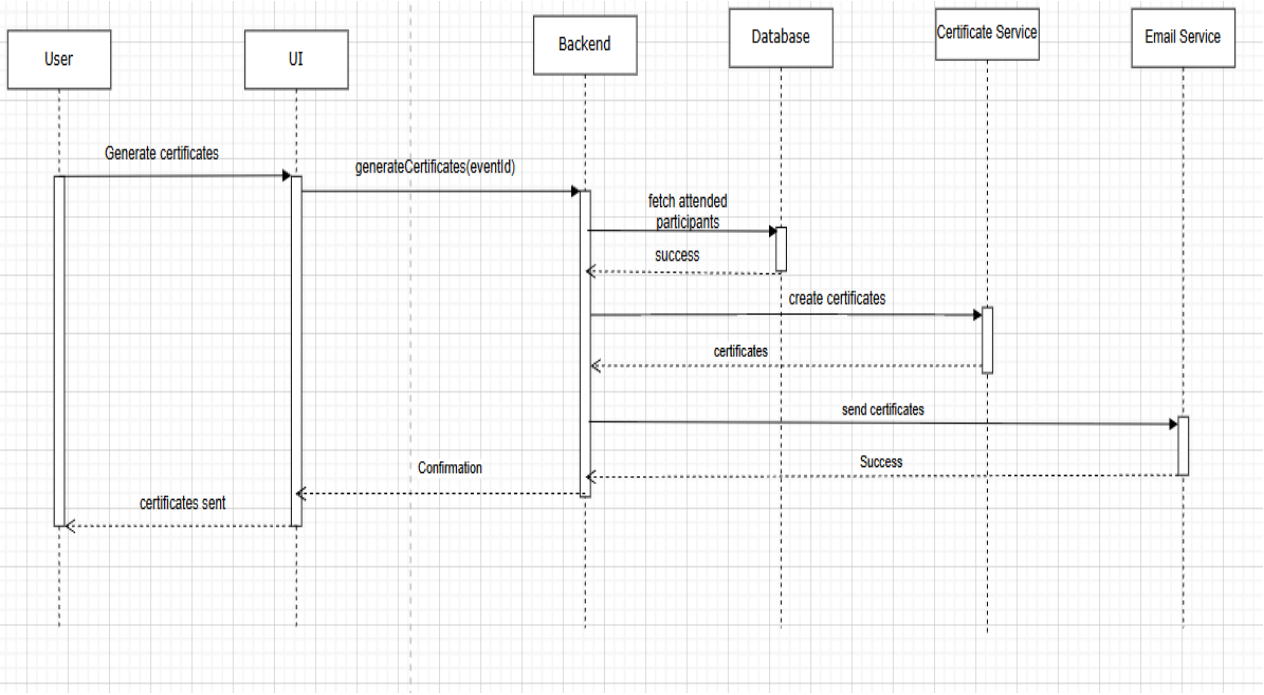

(xii) Extract Participants Data (Admin / Sub-Admin)

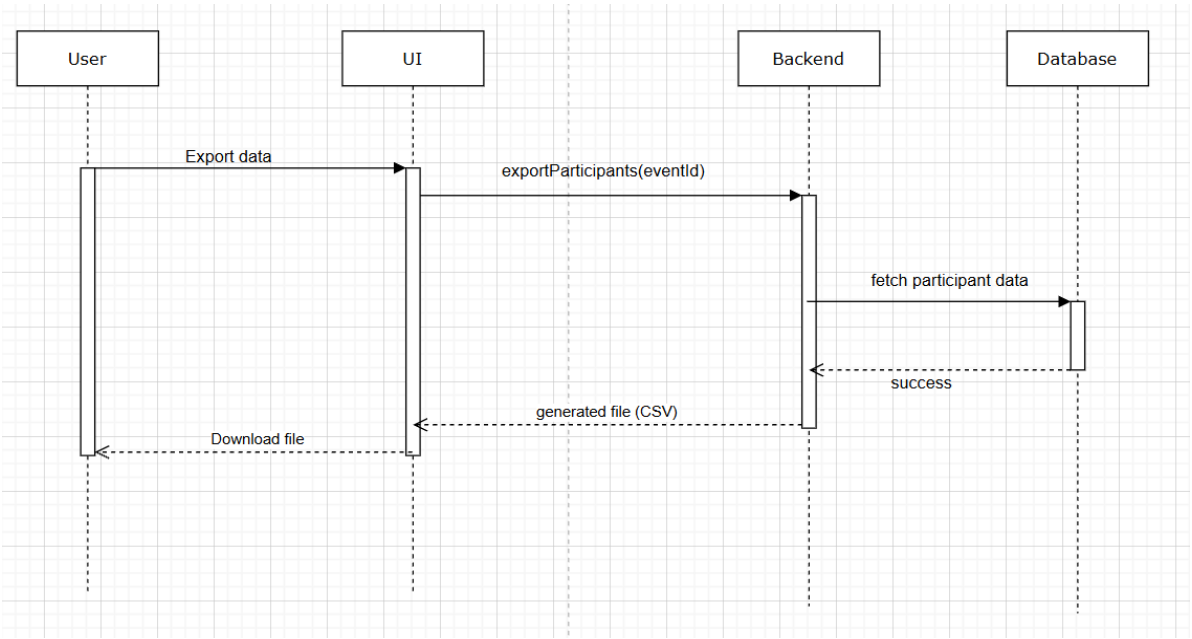

3. Class Diagrams

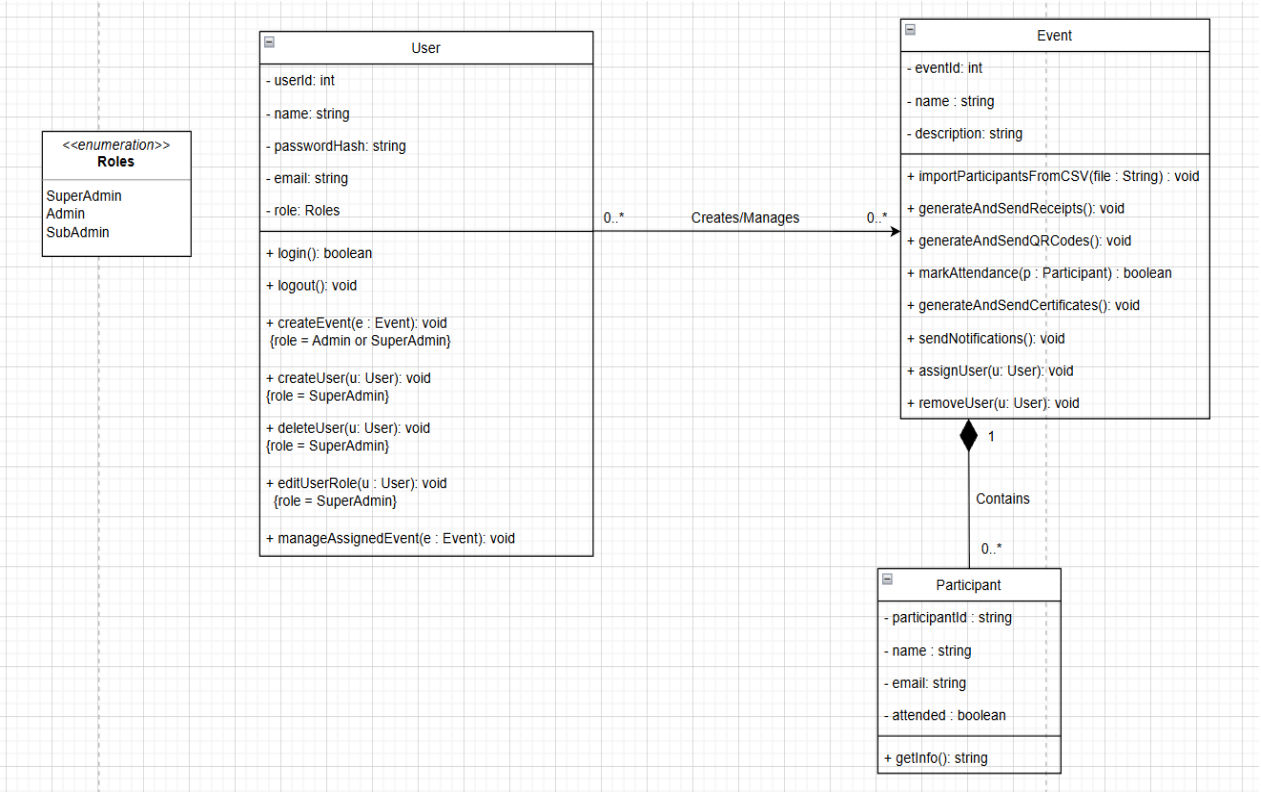

4. State Diagram

(i) User State Diagram

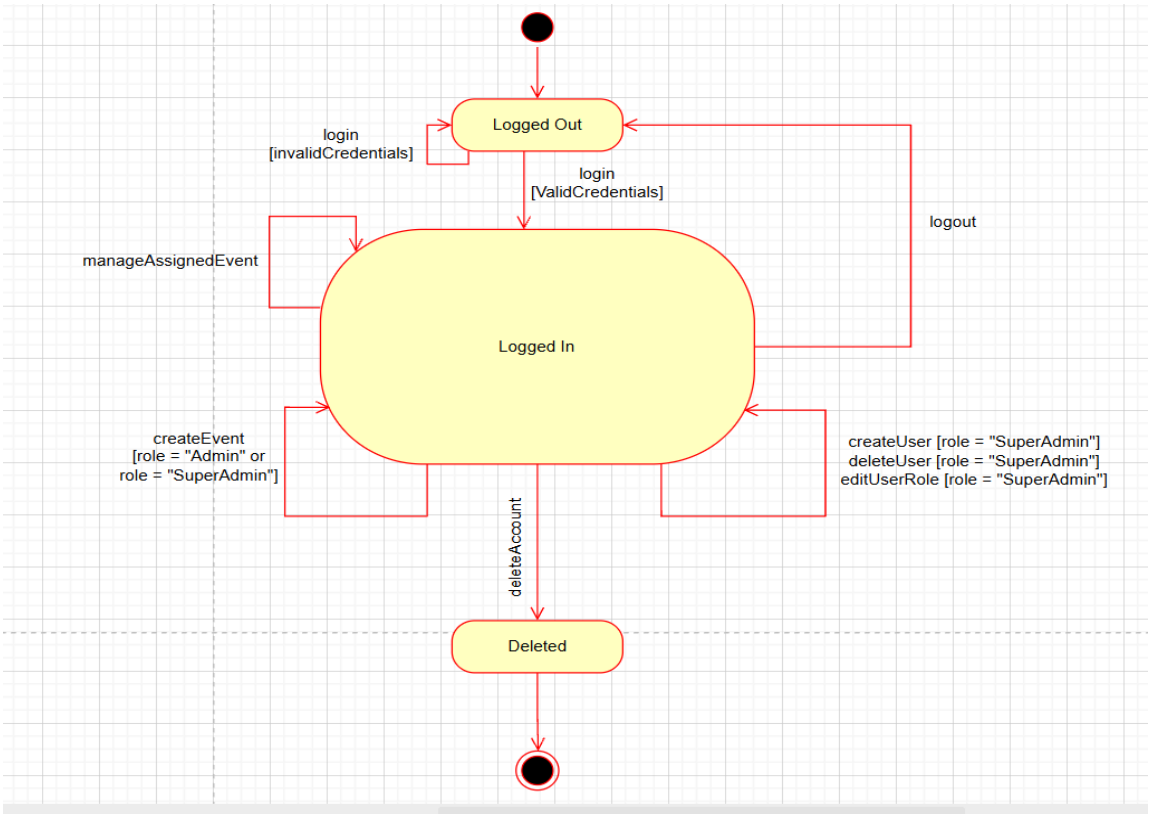

(ii) Event State Diagram

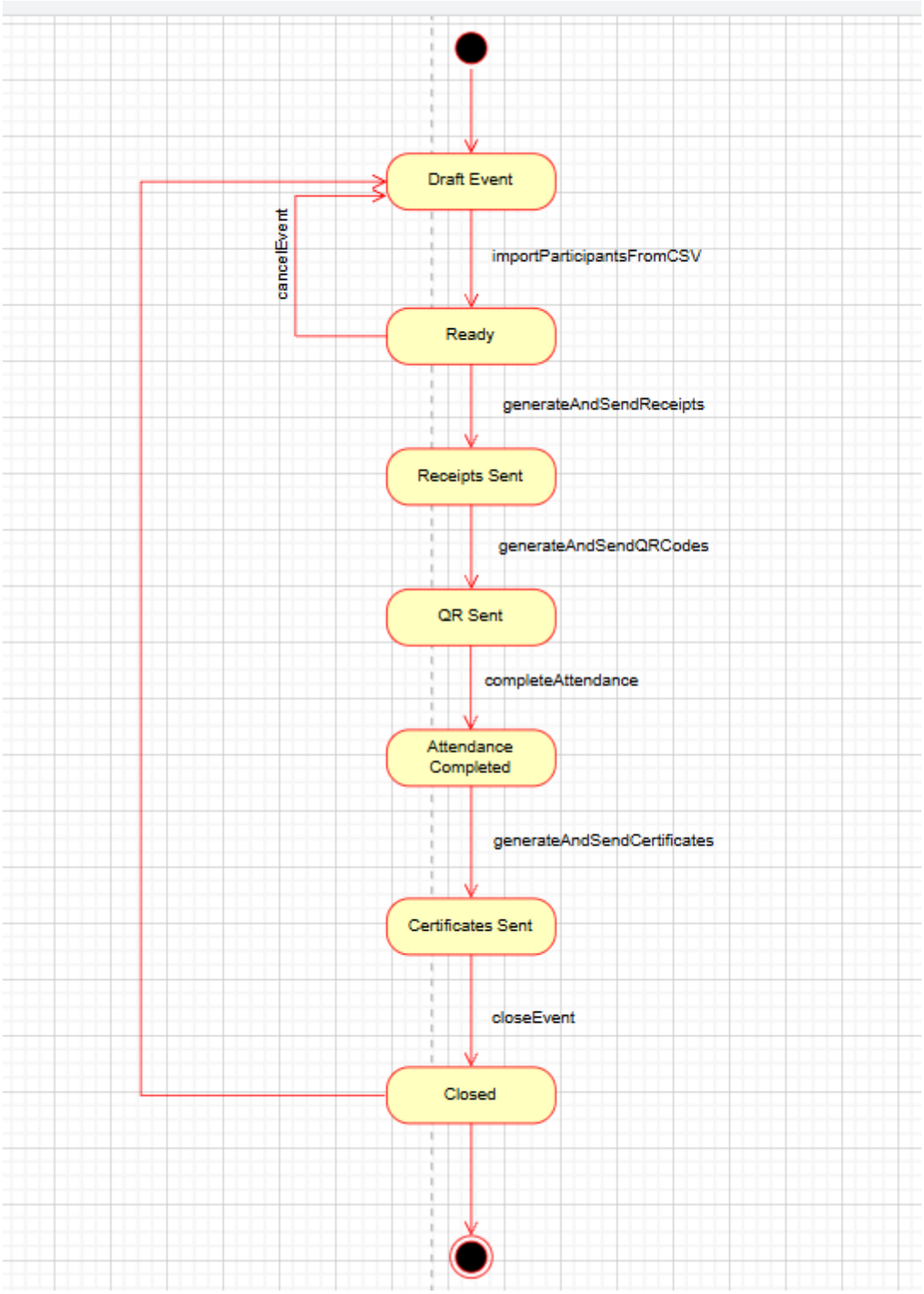
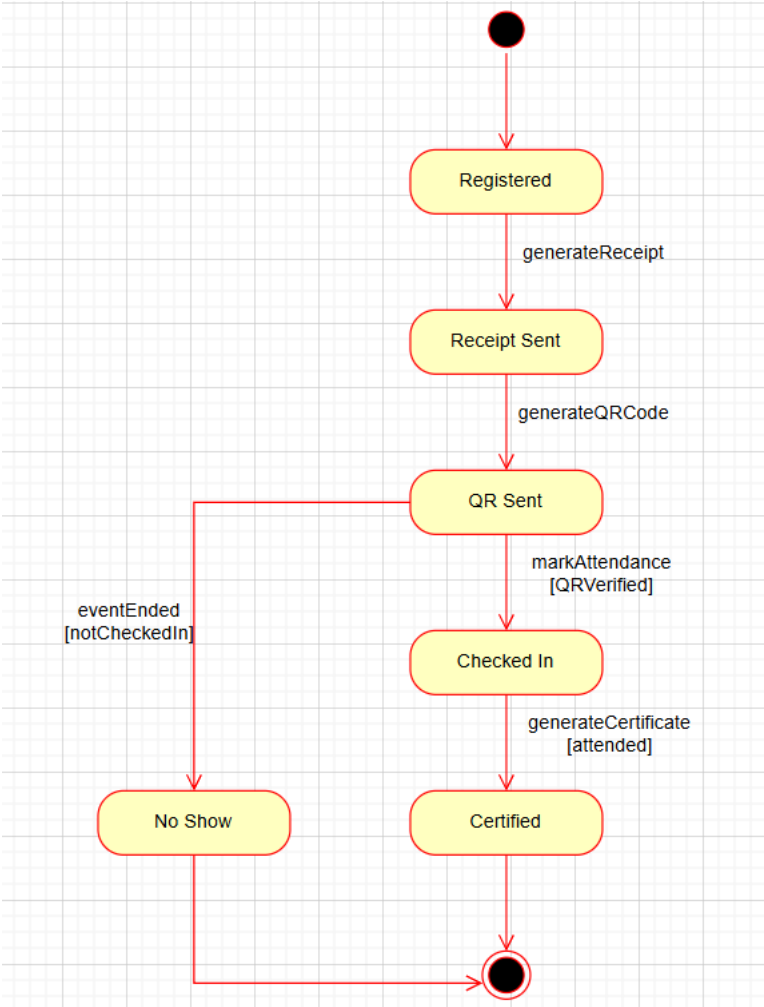
(iii) Participant State Diagram